S4V1 Pin Diode Switch Single Pole, Four Throw Absorptive

AEROFLEX
A passion for performance.

Features:

- Incorporated TTL-compatible driver for convenient system integration and operates from +5V and -15V DC power supplies.
- DC blocks at all RF ports.
- Ruggedized construction.
- RoHS-compliant versions available.
- Hermetic versions available.

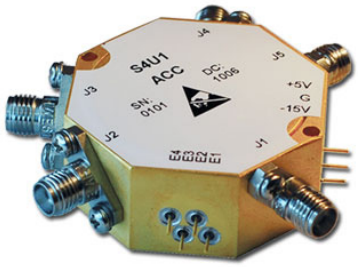

Specifications:

Parameter	Specification	Units
Frequency Range	0.1 – 0.5	GHz
Insertion Loss (max)	1.2	dB
VSWR (max) 50 ohms	1.5	ratio
Isolation (min)	80	dB
Switching Speed (max)	250	nsec
CW RF Power, Operating (max)	1	W

Notes:

DC Bias: (Standard)	+5V +/-0.5V @ 160 mA max -15V +/-3V @ 50 mA max
DC Bias: (-5 option)	+5V +/-0.5V @ 200 mA max -5V +/-0.5V @ 60 mA max
DC Bias: (-12 option)	+15V +/-3V @ 160 mA max -15V +/-3V @ 50 mA max
Control:	TTL 0 = Low Loss TTL 1 = Isolation

E1 controls J2 – J1
E2 controls J3 – J1
E3 controls J4 – J1
E4 controls J5 – J1

Absorptive Switch: 50 ohm termination present at J2, J3, J4 and J5 (in isolation mode).

Switching speed is defined as 50% TTL to 90% RF (t-on) and 50% TTL to 10% RF (t-off).

Environmental Specifications:

MIL-E-5400, MIL-STD-202, MIL-E-16400

Operating Temp:	-55 °C to +85 °C
Storage Temp:	-65 °C to +125 °C
Humidity:	MIL-STD-202F, M103, Cond B
Shock:	MIL-STD-202F, M213, Cond B
Altitude:	MIL-STD-202F, M105, Cond B
Vibration:	MIL-STD-202F, M204, Cond B
Thermal Shock:	MIL-STD-202F, M107, Cond A
Temperature Cycle:	MIL-STD-202F, M105C, Cond D

Mechanical Specifications:

Case Styles:	S4 Outline (Four bit control) S4-2 Outline (Two bit control)
Finish:	Gold Plate per MIL-G-45204
Bias & Control Pins:	ø0.02″ x 0.15″ long
Weight:	60 g max
Mounting:	ø0.10″ through holes (2) places

Two Bit Control: (-2 option)

E2	E1	Low Loss Path
0	0	J2 - J1
0	1	J3 - J1
1	0	J4 - J1
1	1	J5 - J1

Screening:

Internal Visual per MIL-STD-883, Method 2017
Temperature Cycle: -65 °C to +100 °C, 10 cycles

Hermetically-sealed switches are fine and gross leak checked per MIL-STD-883, Method 1014.

Optional High-Rel screening available upon request. Contact the factory to discuss your screening requirements.

AEROFLEX
CONTROL COMPONENTS

40 Industrial Way East, Eatontown , NJ 07724 [USA]
Phone: (732) 460-0212, Fax: (732) 460-0214
www.aeroflex.com/acc, email: acc-sales@aeroflex.com

Revision Date: 1/25/2011

AEROFLEX
CONTROL COMPONENTS

Outline Drawing:

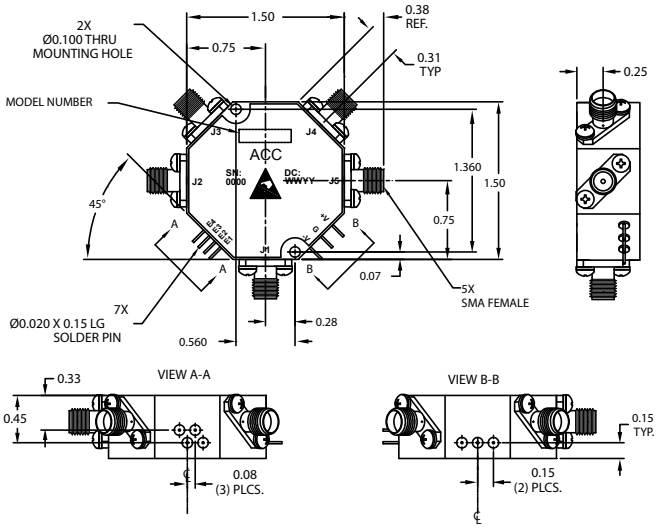

OUTLINE CASE STYLE S4

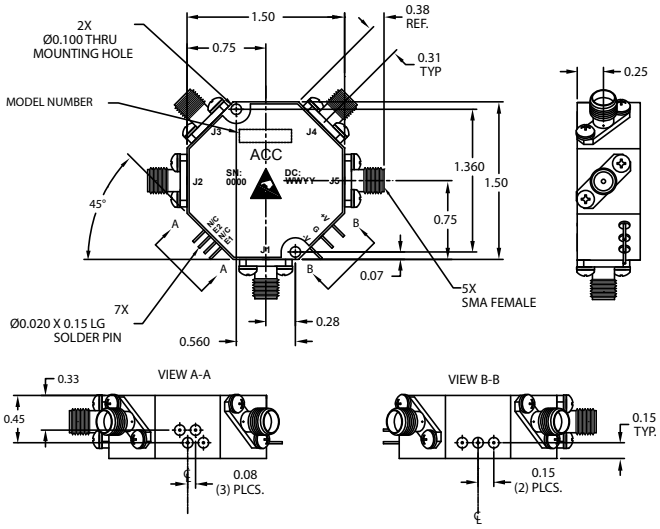

OUTLINE CASE STYLE S4-2

Part Number Ordering Information:

- Add "-RC" suffix: RoHS-compliant
- Add "-H" suffix: Hermetic seal
- Add "-5" suffix: +/-5V DC supplies
- Add "-5-RC" suffix: +/-5V DC supplies, RoHS-compliant
- Add "-5-H" suffix: +/-5V DC supplies, Hermetic seal
- Add "-12" suffix: +/-15V DC supplies
- Add "-12-RC" suffix: +/-15V DC supplies, RoHS-compliant
- Add "-12-H" suffix: +/-15V DC supplies, Hermetic seal
- Add "-2 suffix: Two bit logic control
- Add "-2-RC" suffix: Two bit logic control, RoHS-compliant
- Add "-2-H" suffix: Two bit logic control, Hermetic seal
- Add "-2-5" suffix: Two bit logic control, +/-5V DC supplies
- Add "-2-5-RC" suffix: Two bit logic control, +/-5V DC supplies, RoHS-compliant
- Add "-2-5-H" suffix: Two bit logic control, +/-5V DC supplies, Hermetic seal
- Add "-2-12" suffix: Two bit logic control, +/-15V DC supplies
- Add "-2-12-RC" suffix: Two bit logic control, +/-15V DC supplies, RoHS-compliant
- Add "-2-12-H" suffix: Two bit logic control, +/-15V DC supplies, Hermetic seal

Aeroflex Control Components
Aeroflex Microelectronic Solutions
40 Industrial Way East
Eatontown , NJ 07724 [USA]
Fax: (732) 460-0214

Sales
Phone: (732) 460-0212
ACC-sales@aeroflex.com

ISO 9001:2008 certified

AEROFLEX
A passion for performance.

www.aeroflex.com/Microwave www.aeroflex.com/ACC

Aeroflex Control Components reserves the right to make changes to any products and services herein at any time without notice. Consult Aeroflex or an authorized sales representative to verify that the information in this data sheet is current before using this product. Aeroflex does not assume any responsibility or liability arising out of the application or use of any product or service described herein, except as expressly agreed to in writing by Aeroflex; nor does the purchase, lease, or use of a product or service from Aeroflex convey a license under any patent rights, copyrights, trademark rights, or any other of the intellectual rights of Aeroflex or of third parties.

Copyright 2011 Aeroflex Control Components. All rights reserved.

Our passion for performance is defined by three attributes represented by these three icons: solution-minded, performance-driven and customer-focused.

Revision Date: 1/25/2011